Operating the MP340

Overview

The MP340 is an evaluation kit for the FSK-enabled modules such as the HB180 and HB181. With the LCD screen facing upwards (shown in Figure 1), the USB power input and the sensor configuration switches are on the right. The signal outputs are on the left.

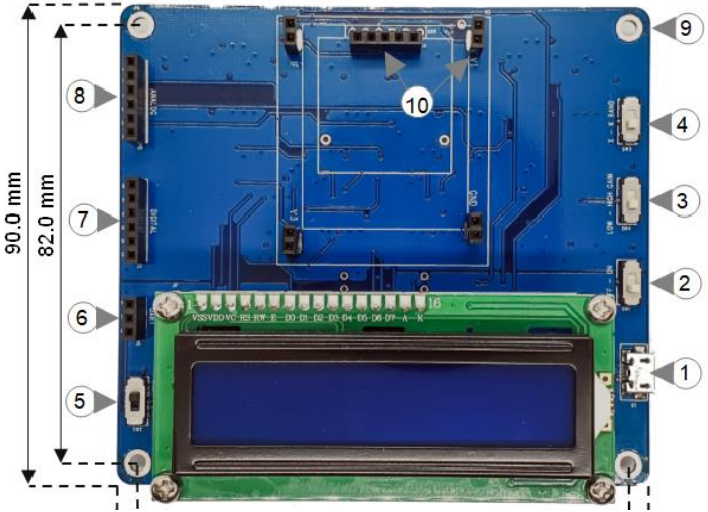

Figure 1

Operating the MP340

Preparing the Modules

The modules need pin headers of about 16mm length to be soldered to the 4 corner pads (i.e., 5V, IF, Gnd, Gnd) before mounting to the MP340. This is shown in Figure 2.

As the module is ESD sensitive, do take note of the following precautions:

- Hold the module by the sides. Do not touch the antennas with your bare hands.
- Solder with an ESD safe soldering iron if possible.
- Follow good soldering practices (i.e., clean soldering surfaces with flux for good adhesion and ease of soldering).

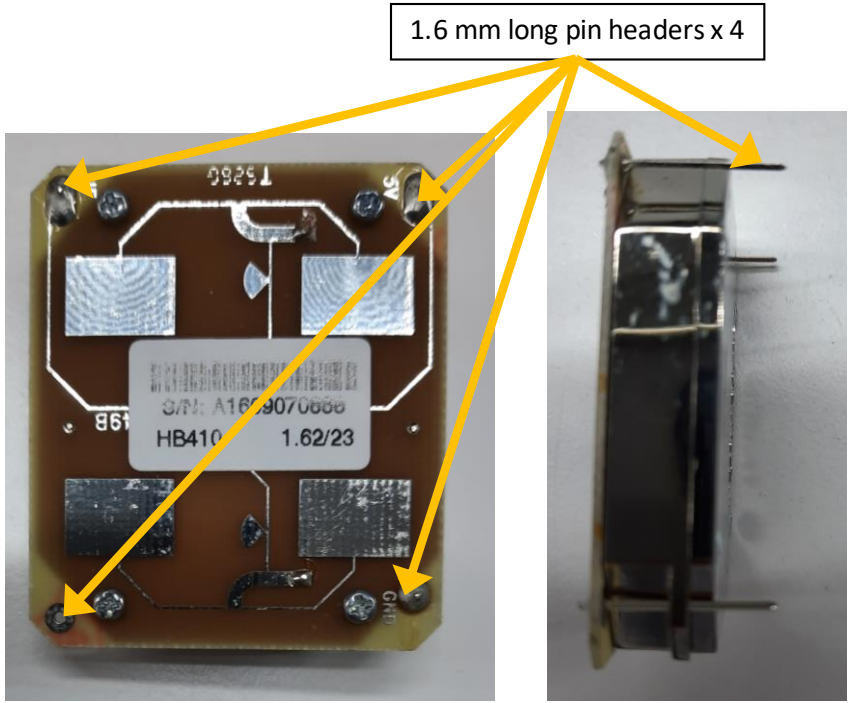

Figure 2

Operating the MP340

Powering up

Once the module is prepared, plug it into the MP340 in the orientation shown in Figure 3. Take extra precaution to match the pinouts of the module to the input labels (i.e., 5V, IF, GND, GND) on the MP340.

Connect a USB power source to the DUT's USB port, U1, via a Micro-USB cable as shown in Figure 3.

Turn on the power via the on/off switch at (2).

On the backside, the LED indicator, DL1, turns on when the slide switch, SW1, is switched ON, as shown in Figure 4.

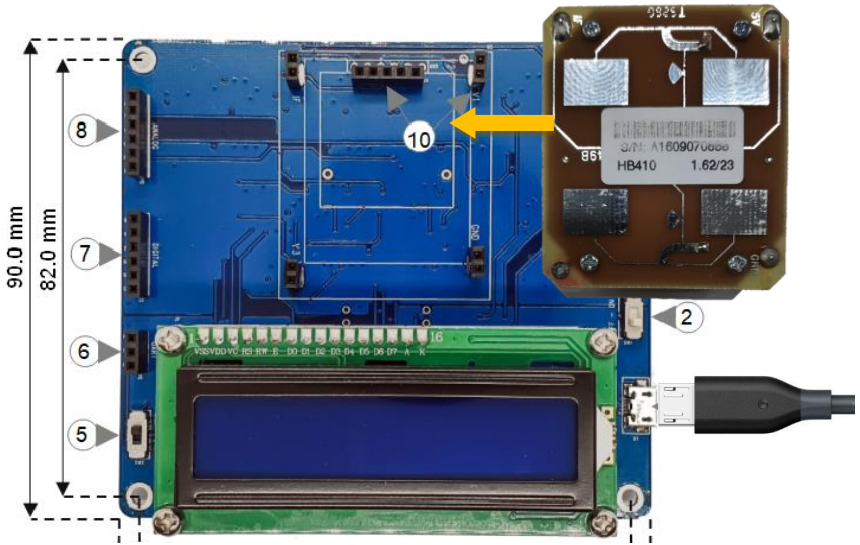

Figure 3

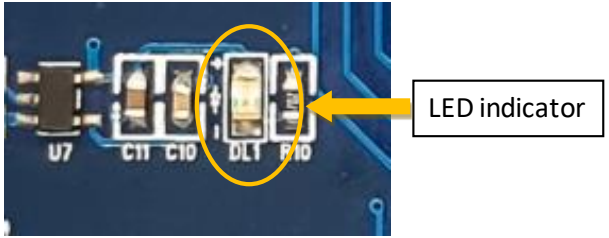

Figure 4

Operating the MP340

Reading from the LCD Panel

Once powered up, the LCD screen shows, “D”, “Dir “ and “S”, which represents Distance, Direction of travel and Speed respectively. Direction of travel is depicted by ‘A’ for ‘Away from’ or ‘T’ for ‘Towards’ the MP340 - This is shown in Figure 5.

Note that the MP340 has a blind zone below 0.5m, and above 15m.

This is usually sufficient to evaluate the feasibility of the HB180 and HB181 in your application.

Figure 5

Operating the MP340

Extracting Analog Raw Signals

To extract and analyze the raw signals after signal conditioning (before signal processing), connect the analog I_1 and I_2 signals to a 2-channel oscilloscope as shown in Figure 6.

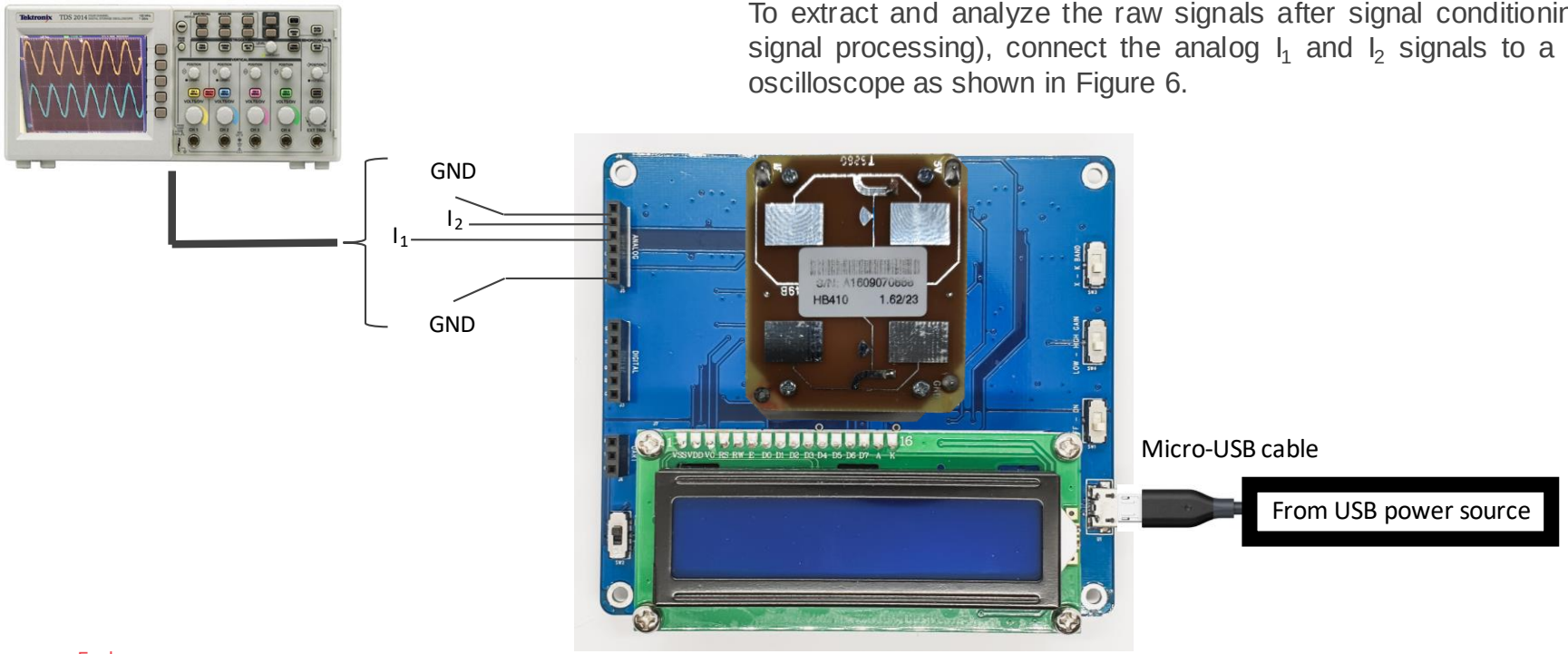

Figure 6

Operating the MP340

Extracting Digital Raw Signals

To extract and analyze the raw digital signals after signal conditioning (before signal processing), connect the digital I_1 and I_2 signals to a 2 channel oscilloscope as shown in Figure 7.

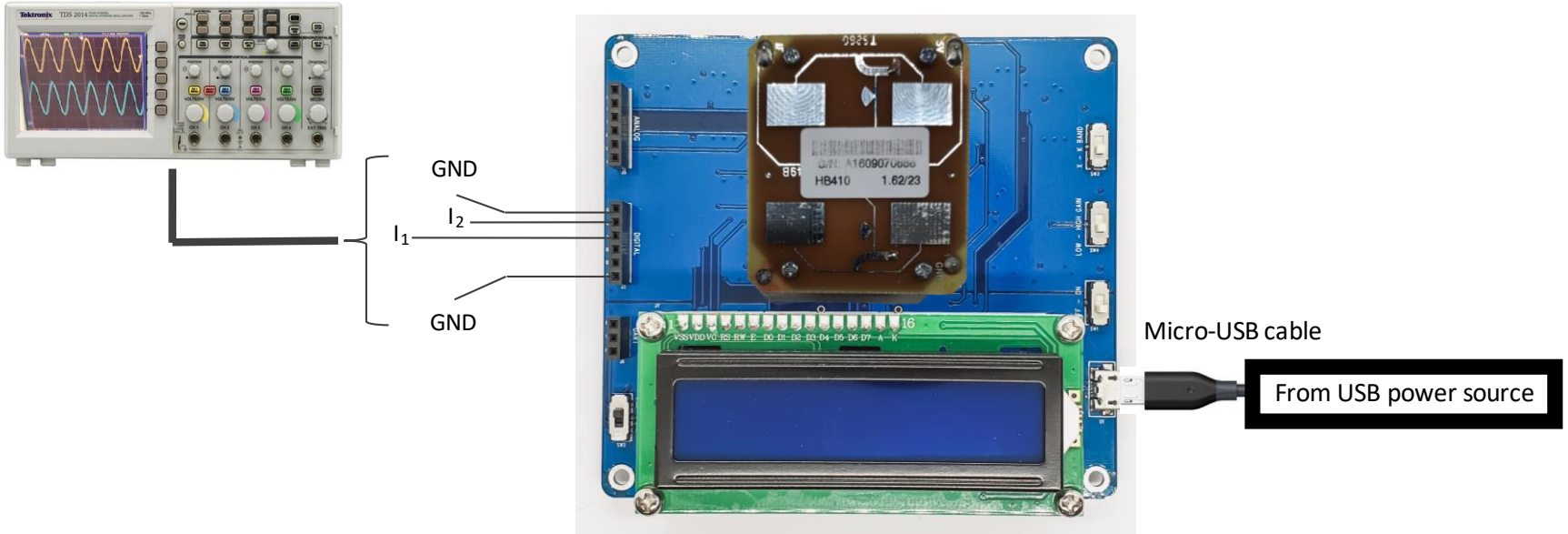

Figure 7

Operating the MP340

Reading from UART via PC

To read information from UART, remove USB power supply. Power the MP340 via the PC instead. Ensure that the USB-UART selector switch, SW2, is switched to USB, as shown in Figure 8.

Install the Arduino IDE into your computer before turning on the MP340.

Then, turn on the MP340.

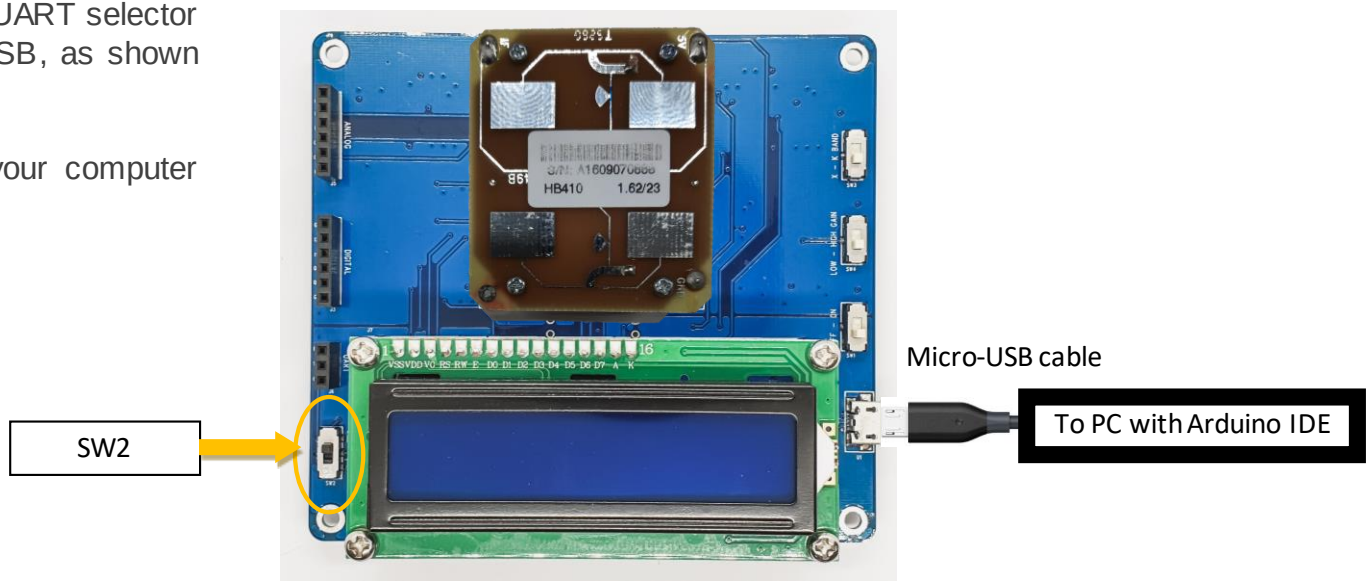

Figure 8

Operating the MP340
Reading from UART via PC

Run the Arduino IDE on the computer and select the COM port which the DUT is connected (See Figure 9).
Go to Tools > Port > Select a “COM”

Note: COM”x”, where x is dependent on the port which the DUT is connected to. It may not necessary be COM5.

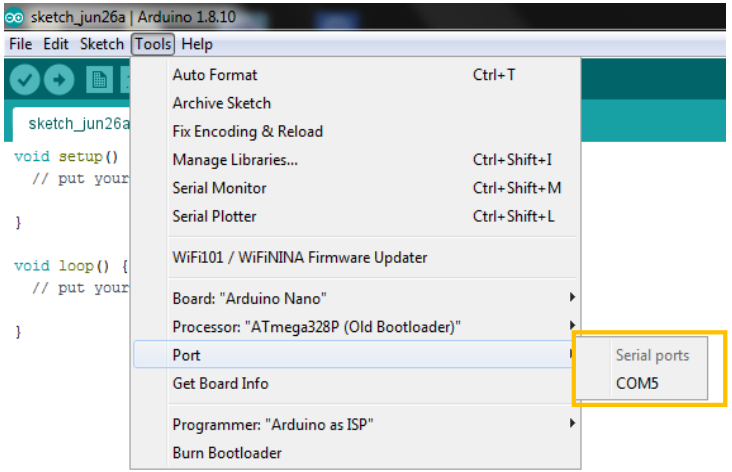

Figure 9

Operating the MP340

Reading from UART via PC

A blue tick shows that the COM port is selected, as shown in Figure 10.

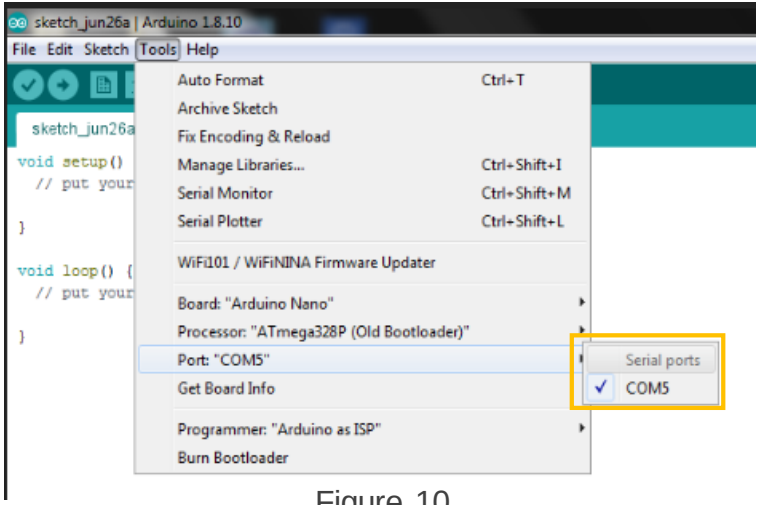

Figure 10

Operating the MP340
Reading from UART via PC

Open Serial Monitor. Go to Tools > Serial Monitor. Alternatively, press Ctrl + Shift + M.

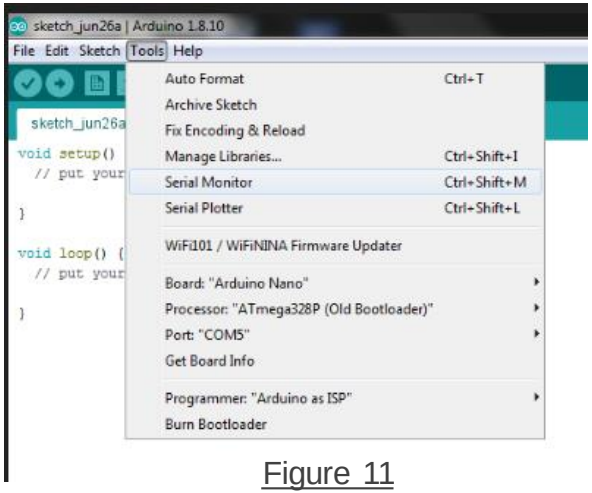

Figure 11

The Serial Monitor will appear, as shown in Figure 12. Set the baud rate to 38400 in the same window.

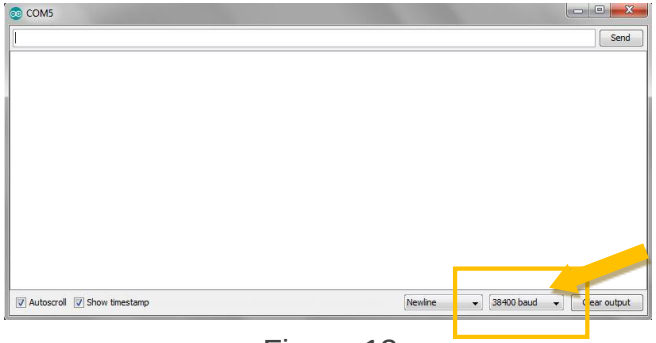

Figure 12

Operating the MP340

Reading from UART via PC

Wave at the sensor front and observe the output information.
Range, Speed and Direction information should be shown on the Serial Monitor.

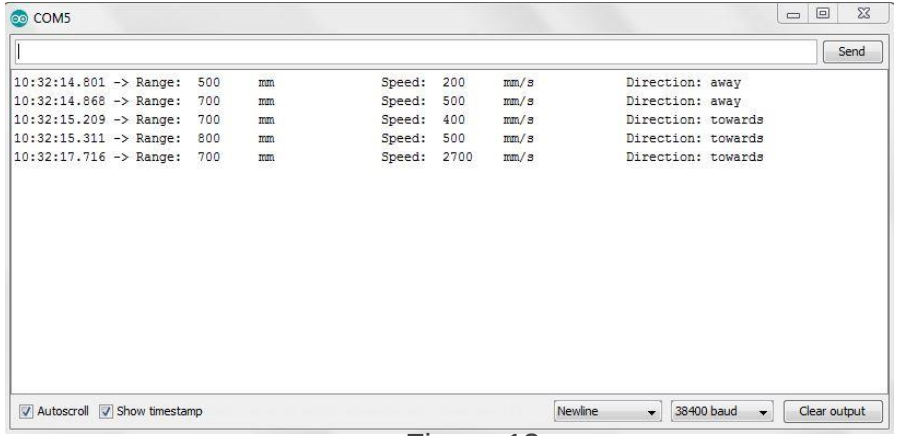

Figure 13

ST Electronics (Satcom & Sensor Systems) Pte Ltd
(Regn No:199103901W)
PROPRIETARY INFORMATION

The information contained herein is the property of ST Electronics (Satcom & Sensor Systems) Pte Ltd and may not be copied, used or disclosed in whole or in part to any third party except with written approval of ST Electronics (Satcom & Sensor Systems) Pte Ltd.

REV	DESCRIPTION	DATE	APPROVED
A	New Release	04 MAR 20	
B	Modified Comparator Circuit	27 JUL 20	

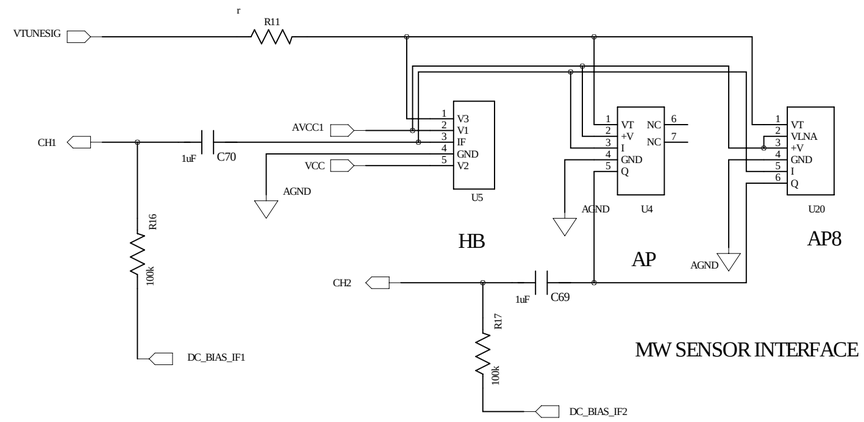

MW SENSOR INTERFACE

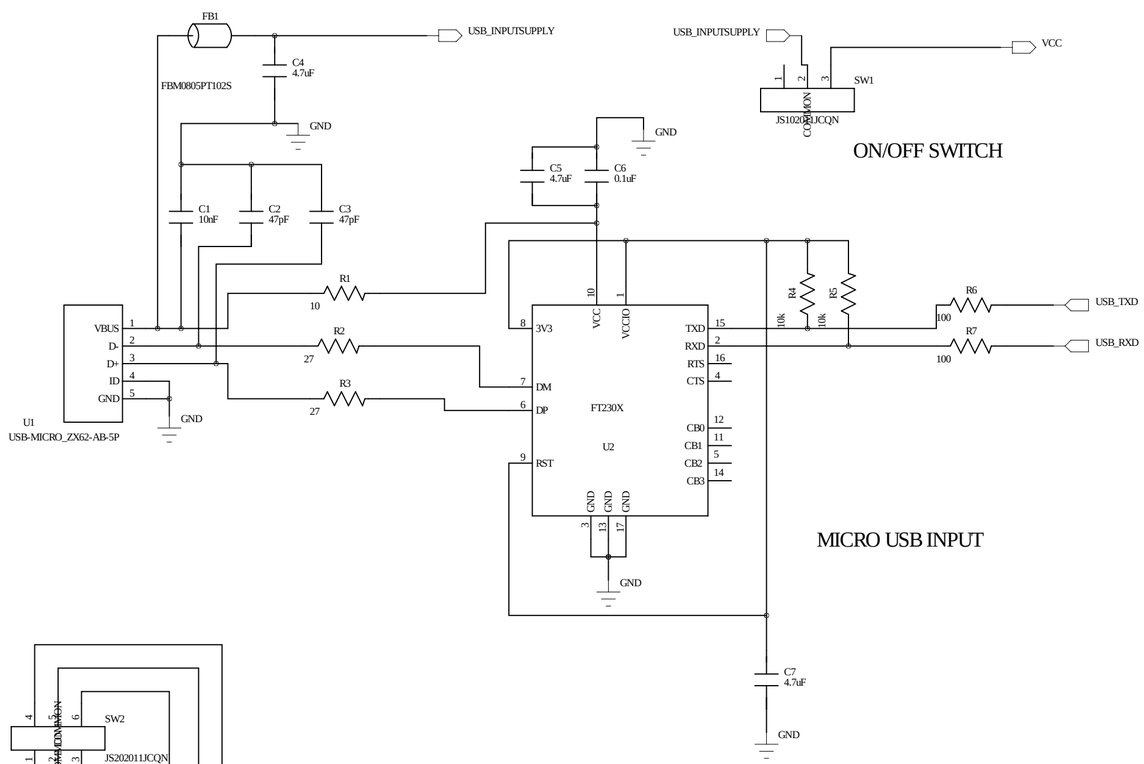

MICRO USB INPUT

ON/OFF SWITCH

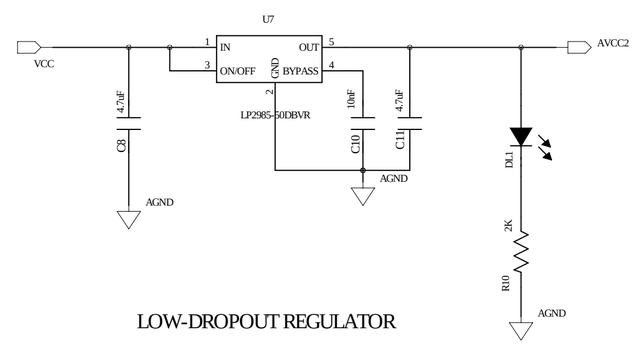

LOW-DROPOUT REGULATOR

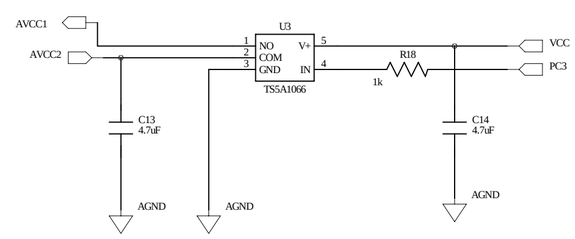

PULSING CIRCUIT

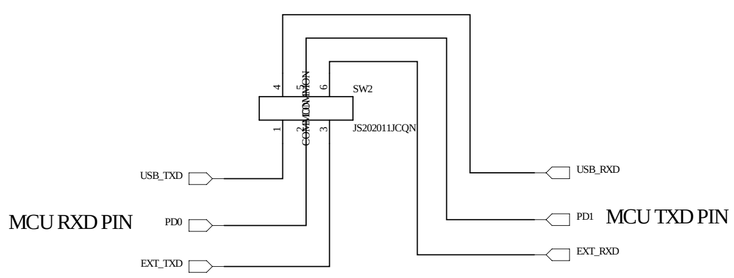

UART INTERFACE SELECTOR
1/2 & 4/5 SHORT FOR USB UART INTERFACE
2/3 & 5/6 SHORT FOR EXTERNAL DEVICE UART INTERFACE

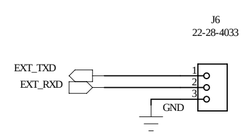

SIMPLIFIED UART INTERFACE (FOR EXT. DEVICE)

3rd ANGLE PROJECTION

ST Electronics (Satcom & Sensor Systems) Pte Ltd

UNLESS OTHERWISE SPECIFIED	DRAWN BY : NG WEI HAO		DATE : 27-07-2020	
DIMENSIONS IN		NAME	SIGNATURE	DATE
TOLERANCE	VERIFIED BY			
FINISHING	APPROVED BY			
MATERIAL	ENGRG			
SPECIAL TREATMENT	PRODUCTION			
	QA			

PART NAME
SD FOR MD2 PCBA

REV. B

DRAWING NO. SD01520081

SIZE A3 | SCALE NTS | SHEET 1 OF 5

DO NOT SCALE DRAWING

ST Electronics (Satcom & Sensor Systems) Pte Ltd
(Regn No:199103901W)
PROPRIETARY INFORMATION

The information contained herein is the property of ST Electronics (Satcom & Sensor Systems) Pte Ltd and may not be copied, used or disclosed in whole or in part to any third party except with written approval of ST Electronics (Satcom & Sensor Systems) Pte Ltd.

REV	DESCRIPTION	DATE	APPROVED
A	New Release	04 MAR 20	
B	Modified Comparator Circuit	27 JUL 20	

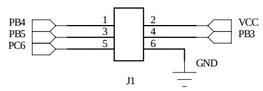

PROGRAMMING KIT INTERFACE

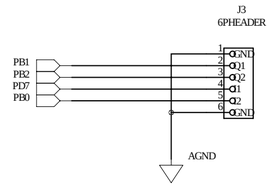

DIGITAL OUTPUTS AFTER COMPARATOR

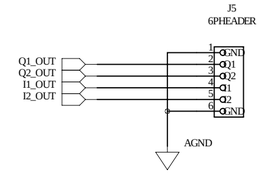

ANALOG OUTPUTS AFTER IF-AMP

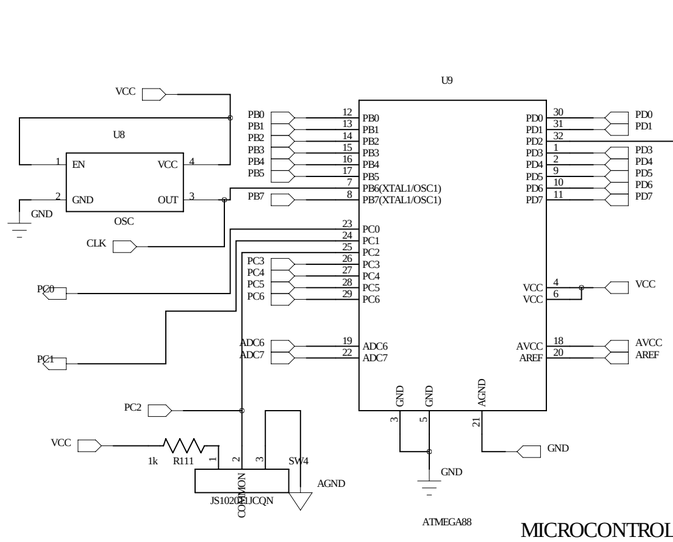

IF GAIN SELECTOR

MICROCONTROLLER INTERFACE

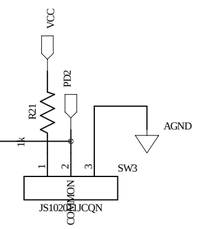

X/K BAND SELECTOR

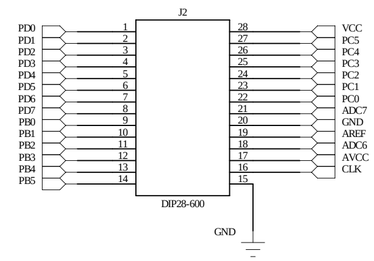

TEST POINT

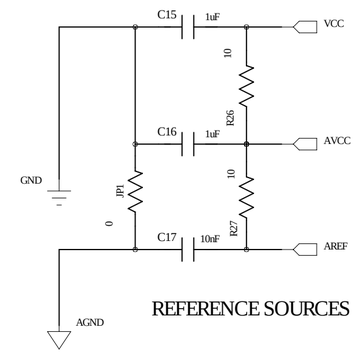

REFERENCE SOURCES

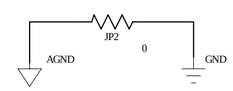

COMMON GND

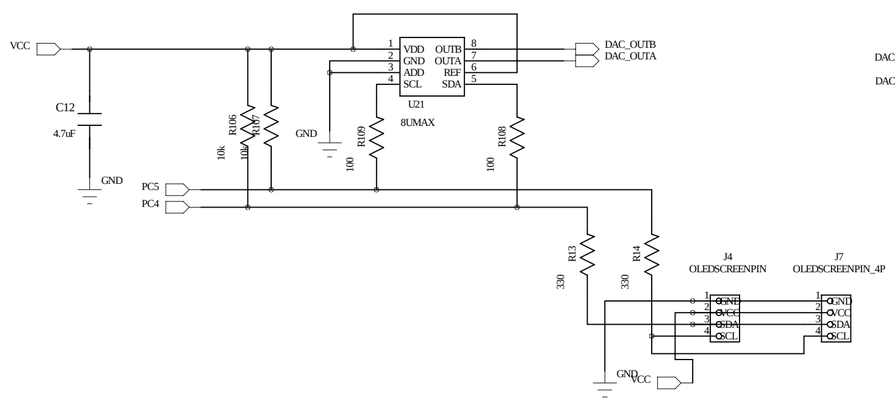

VOLTAGE OUTPUT DAC FOR V-TUNE AND I2C FOR LCD

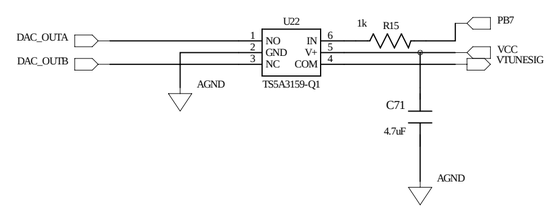

V-TUNE SIGNAL PULSING WITH/WITHOUT OFFSET

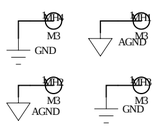

DRILL HOLE FOR STAND

3rd ANGLE PROJECTION

ST Electronics (Satcom & Sensor Systems) Pte Ltd

UNLESS OTHERWISE SPECIFIED	DRAWN BY : NG WEI HAO		DATE : 27-07-2020	
DIMENSIONS IN		NAME	SIGNATURE	DATE
TOLERANCE	VERIFIED BY			
FINISHING	APPROVED BY			
MATERIAL	ENGRG			
SPECIAL TREATMENT	PRODUCTION			
	QA			

PART NAME
SD FOR MD2 PCBA

REV. B

DRAWING NO. SD01520081

SIZE A3 | SCALE NTS | SHEET 2 OF 5

DO NOT SCALE DRAWING

ST Electronics (Satcom & Sensor Systems) Pte Ltd
(Regn No:199103901W)
PROPRIETARY INFORMATION

The information contained herein is the property of ST Electronics (Satcom & Sensor Systems) Pte Ltd and may not be copied, used or disclosed in whole or in part to any third party except with written approval of ST Electronics (Satcom & Sensor Systems) Pte Ltd.

REV	DESCRIPTION	DATE	APPROVED
A	New Release	04 MAR 20	
B	Modified Comparator Circuit	27 JUL 20	

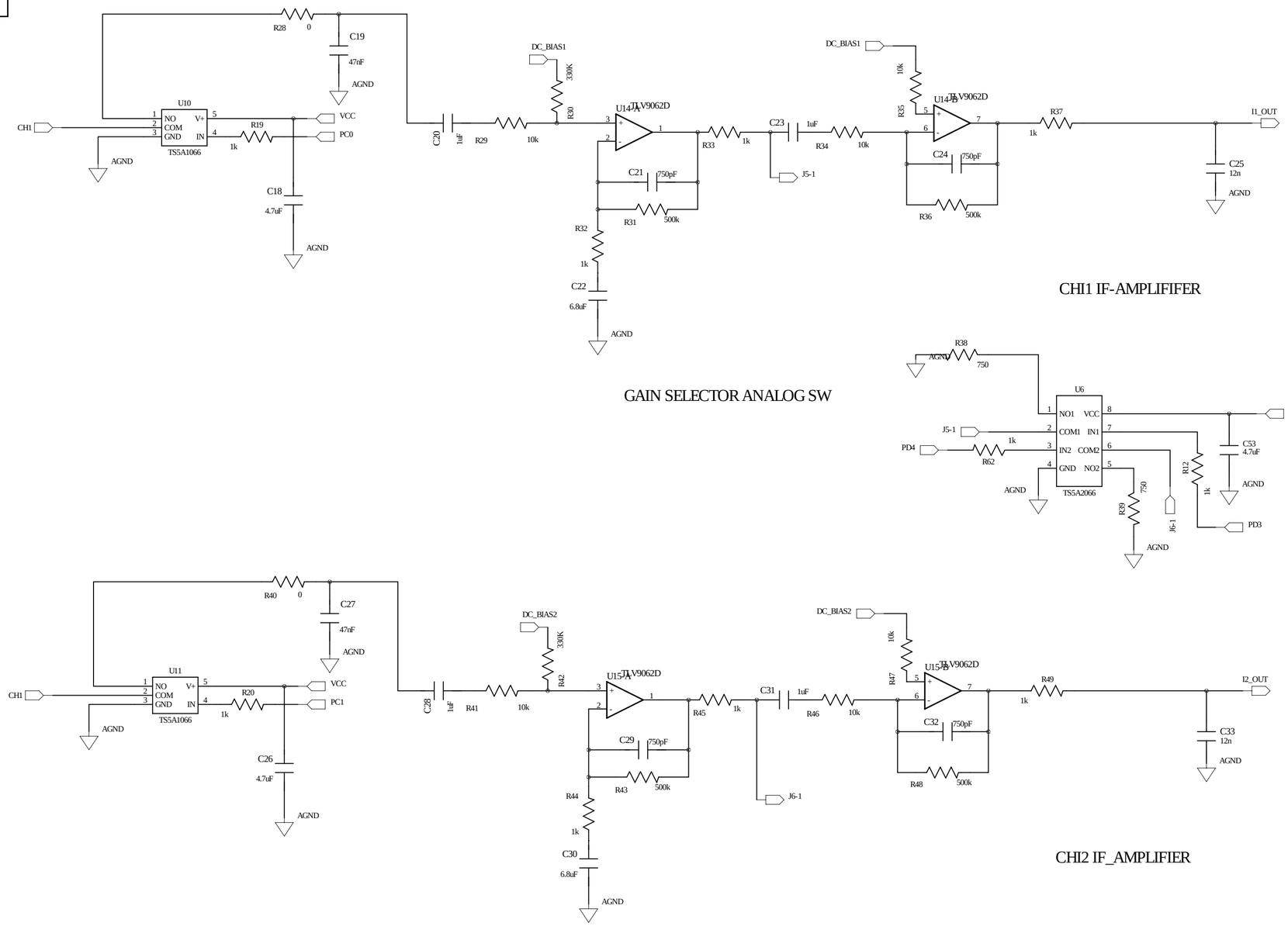

3rd ANGLE PROJECTION

ST Electronics (Satcom & Sensor Systems) Pte Ltd

UNLESS OTHERWISE SPECIFIED	DRAWN BY : NG WEI HAO		DATE : 27-07-2020	
DIMENSIONS IN		NAME	SIGNATURE	DATE
TOLERANCE	VERIFIED BY			
FINISHING	APPROVED BY			
MATERIAL	ENGRG			
SPECIAL TREATMENT	PRODUCTION			
	QA			

PART NAME
SD FOR MD2 PCBA

REV. B

DRAWING NO. SD01520081

SIZE A3 | SCALE NTS | SHEET 3 OF 5

DO NOT SCALE DRAWING

ST Electronics (Satcom & Sensor Systems) Pte Ltd
(Regn No:199103901W)
PROPRIETARY INFORMATION

The information contained herein is the property of ST Electronics (Satcom & Sensor Systems) Pte Ltd and may not be copied, used or disclosed in whole or in part to any third party except with written approval of ST Electronics (Satcom & Sensor Systems) Pte Ltd.

REV	DESCRIPTION	DATE	APPROVED
A	New Release	04 MAR 20	
B	Modified Comparator Circuit	27 JUL 20	

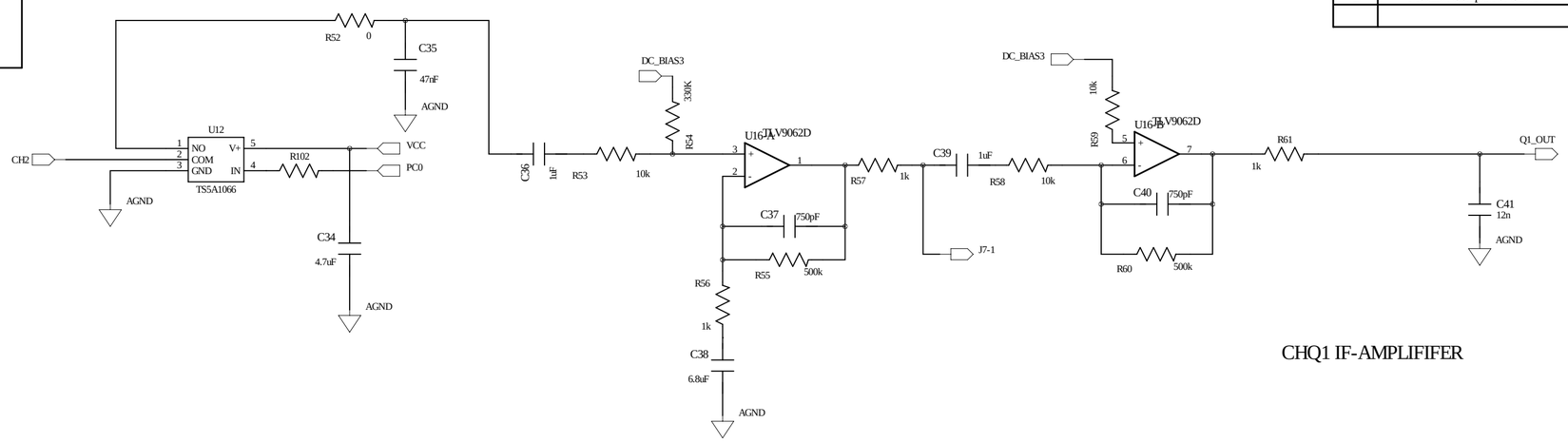

CHQ1 IF-AMPLIFIFER

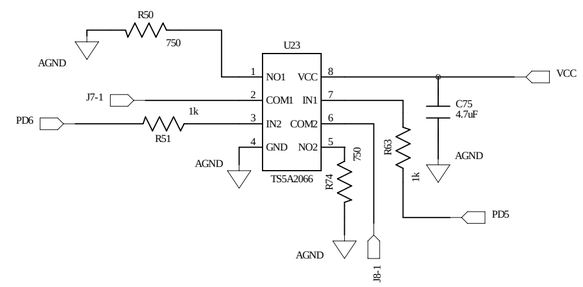

GAIN SELECTOR ANALOG SW

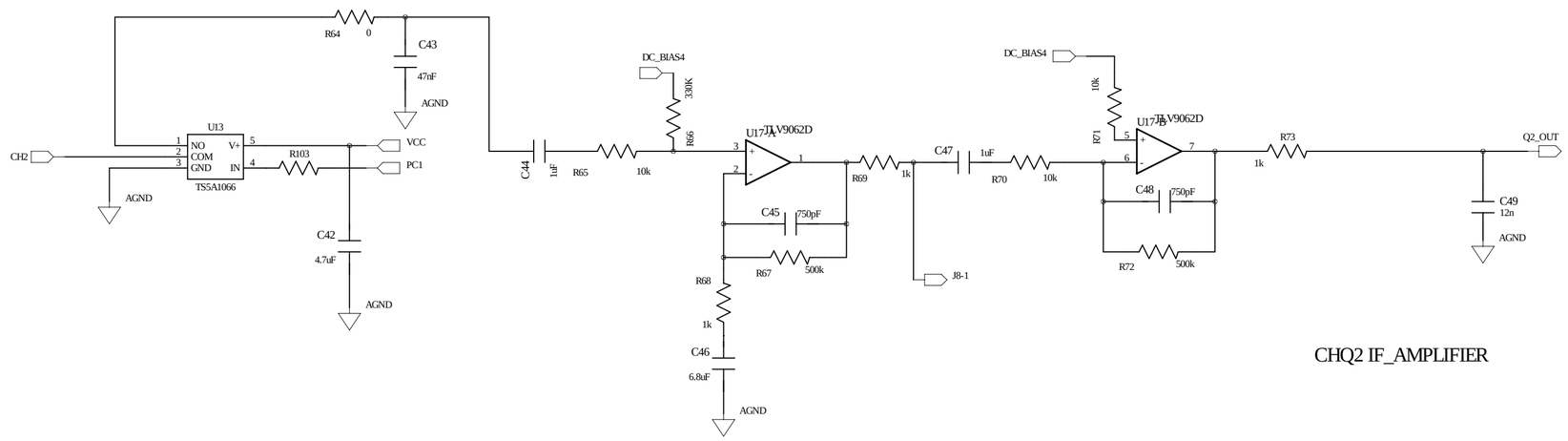

CHQ2 IF_AMPLIFIER

3rd ANGLE PROJECTION

ST Electronics (Satcom & Sensor Systems) Pte Ltd

UNLESS OTHERWISE SPECIFIED	DRAWN BY : NG WEI HAO		DATE : 27-07-2020	
DIMENSIONS IN		NAME	SIGNATURE	DATE
TOLERANCE	VERIFIED BY			
FINISHING	APPROVED BY			
MATERIAL	ENGRG			
SPECIAL TREATMENT	PRODUCTION			
	QA			

PART NAME
SD FOR MD2 PCBA

REV. B

DRAWING NO. SD01520081

SIZE A3 | SCALE NTS | SHEET 4 OF 5

DO NOT SCALE DRAWING

ST Electronics (Satcom & Sensor Systems) Pte Ltd
(Regn No:199103901W)
PROPRIETARY INFORMATION

The information contained herein is the property of ST Electronics (Satcom & Sensor Systems) Pte Ltd and may not be copied, used or disclosed in whole or in part to any third party except with written approval of ST Electronics (Satcom & Sensor Systems) Pte Ltd.

REV	DESCRIPTION	DATE	APPROVED
A	New Release	04 MAR 20	
B	Modified Comparator Circuit	27 JUL 20	

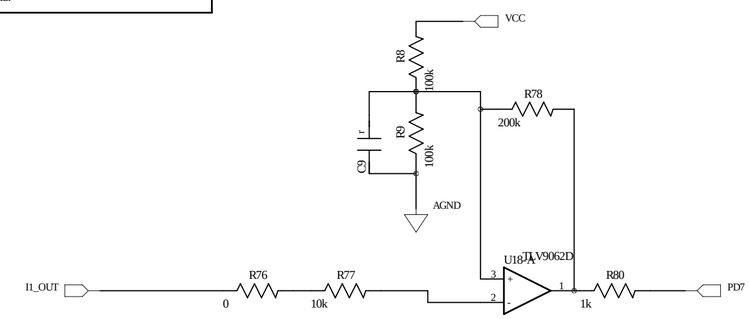

I1 COMPARATOR

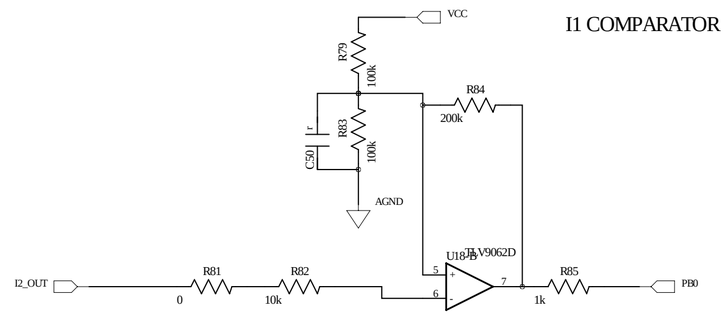

I2 COMPARATOR

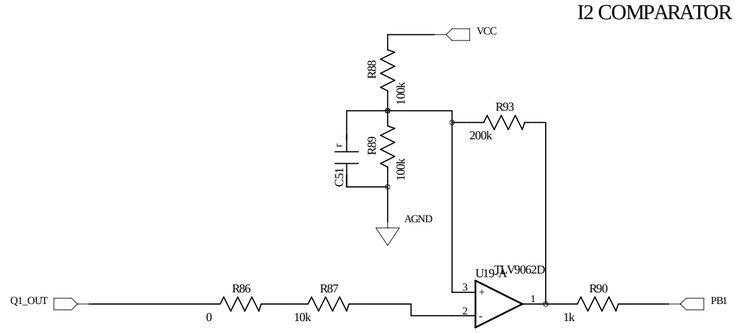

Q1 COMPARATOR

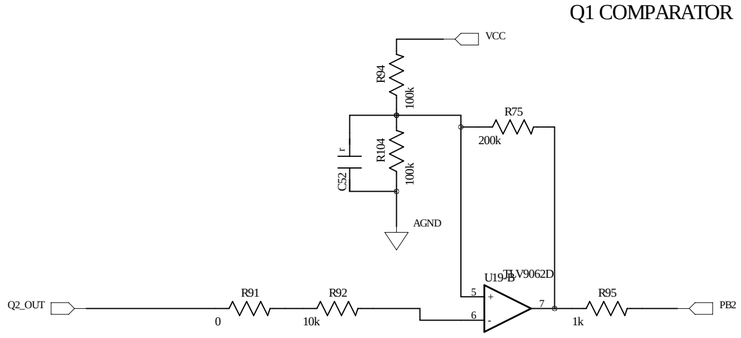

Q2 COMPARATOR

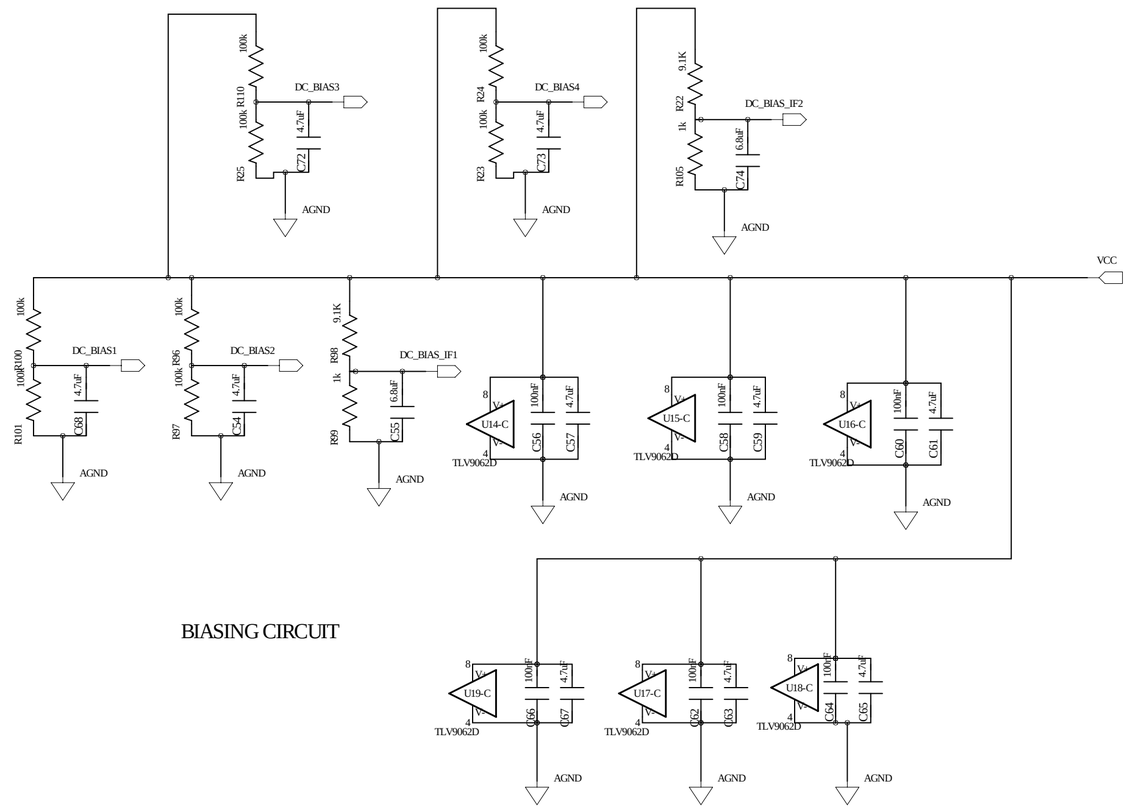

BIASING CIRCUIT

3rd ANGLE PROJECTION

ST Electronics (Satcom & Sensor Systems) Pte Ltd

UNLESS OTHERWISE SPECIFIED	DRAWN BY : NG WEI HAO		DATE : 27-07-2020	
DIMENSIONS IN		NAME	SIGNATURE	DATE
TOLERANCE	VERIFIED BY			
FINISHING	APPROVED BY			
MATERIAL	ENGRG			
SPECIAL TREATMENT	PRODUCTION			
	QA			

PART NAME
SD FOR MD2 PCBA

REV. B

DRAWING NO. SD01520081

SIZE A3 | SCALE NTS | SHEET 5 OF 5

DO NOT SCALE DRAWING